Radiomuseum

Thank you for your interest in our schematics. The schematic is available on the next page.

If you want to download additional parts of a schematic, or additional schematics, these must be requested individually.

To provide you with this information, more than 6000 members work regularly on the content of Radiomuseum.org.

As a member, you can access schematics, large images without watermarks and collector's prices. You will also surf at Radiomuseum.org without advertising. To do so, you may support Radiomuseum.org with a one-time membership fee of 20 € or 30 CHF or 25 US $. We would be delighted if you joined as a member:

https://www.radiomuseum.org/dsp_anmelden_start.cfm

These books might be of interest of you:

Hello, Everybody! The Dawn of American Radio

Long before the Internet, another young technology was transforming the way we connect with the world. At the dawn of the twentieth century, radio grew from an obscure hobby into a mass medium with the power to reach millions of people.

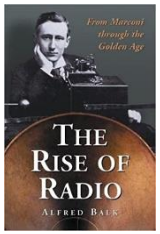

The Rise of Radio, from Marconi through the Golden Age

As the dominant form of electronic mass communication in the United States from the 1930s into the 1950s, radio helped to forge a modern continental nation. It fused myriad subcultures heavily rural, ethnic, and immigrant into a national identity, unifying the nation in the face of the Depression and war.

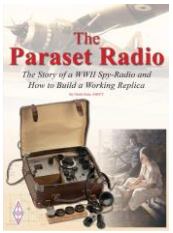

The Paraset Radio: The Story of a WWII Spy-Radio and How to Build a Working Replica

This book describes the gripping story behind the Paraset – a unique spy-radio, dropped behind enemy lines in the dark days of WWII. This radio being both light weight and state of the art for the time was concealed in a suitcase, making ideal for use by the spies of SOE.

Click **here** for further information.

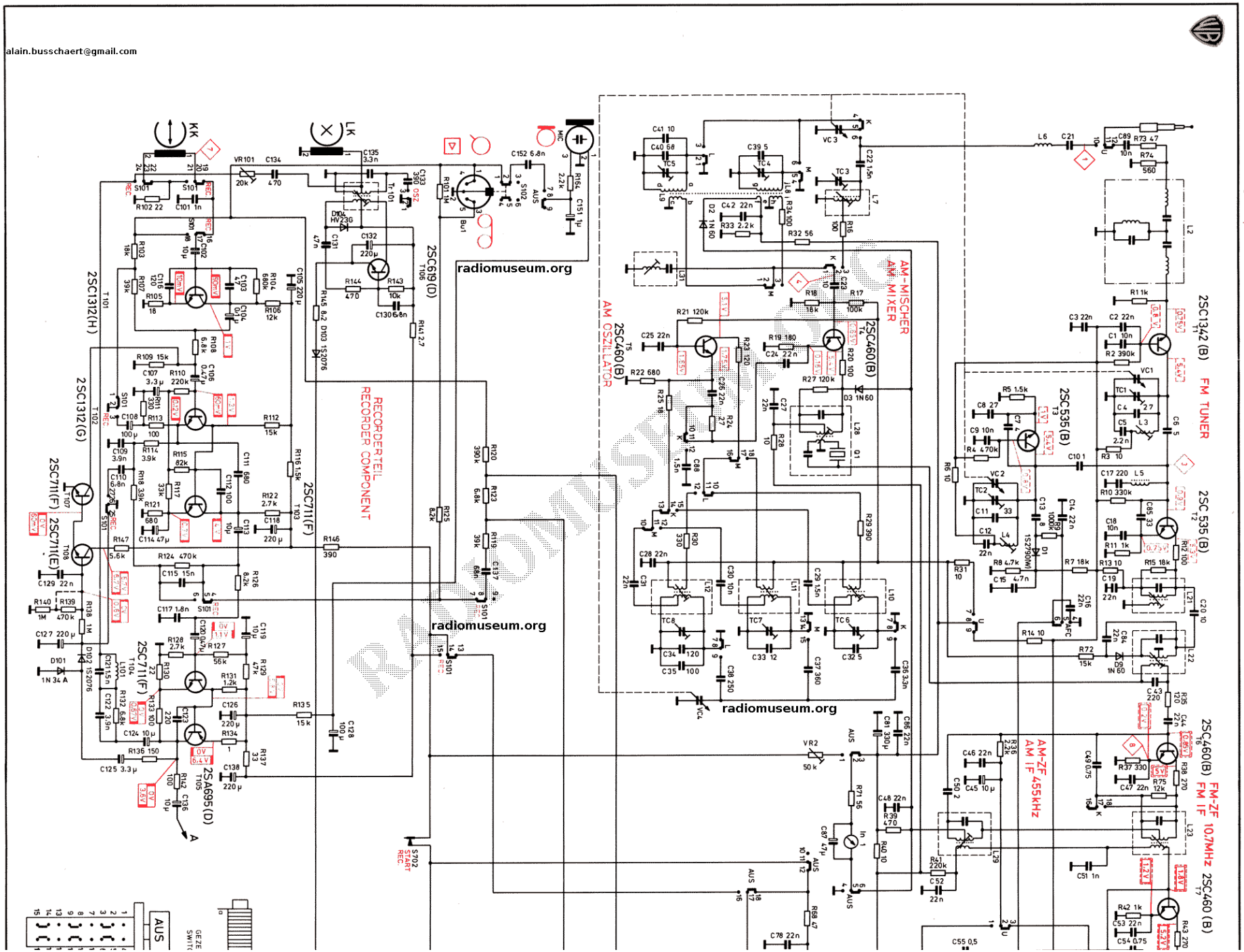
Schaltbild – Circuit Diagram
alain.busschaert@gmail.com
FM TUNER
2SC1342 (B)
2SC535 (B)
2SC460 (B)
FM-ZF 10.7MHz
FM IF
AM-MISCHER
AM MIXER
AM OSZILLATOR
AM-ZF
AM IF 455kHz
RECORDERTEIL
RECORDER COMPONENT
2SC1312(H)
2SC1312(G)
2SC711(F)
2SC711(E)
2SA695(D)
2SC619(D)
radiomuseum.org